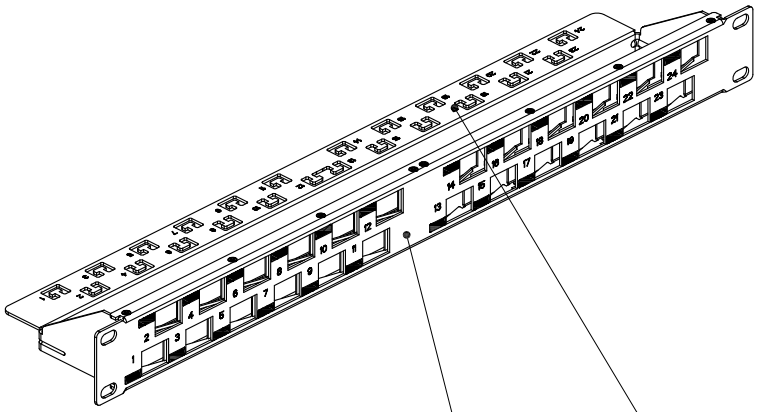

SCALE 1/4

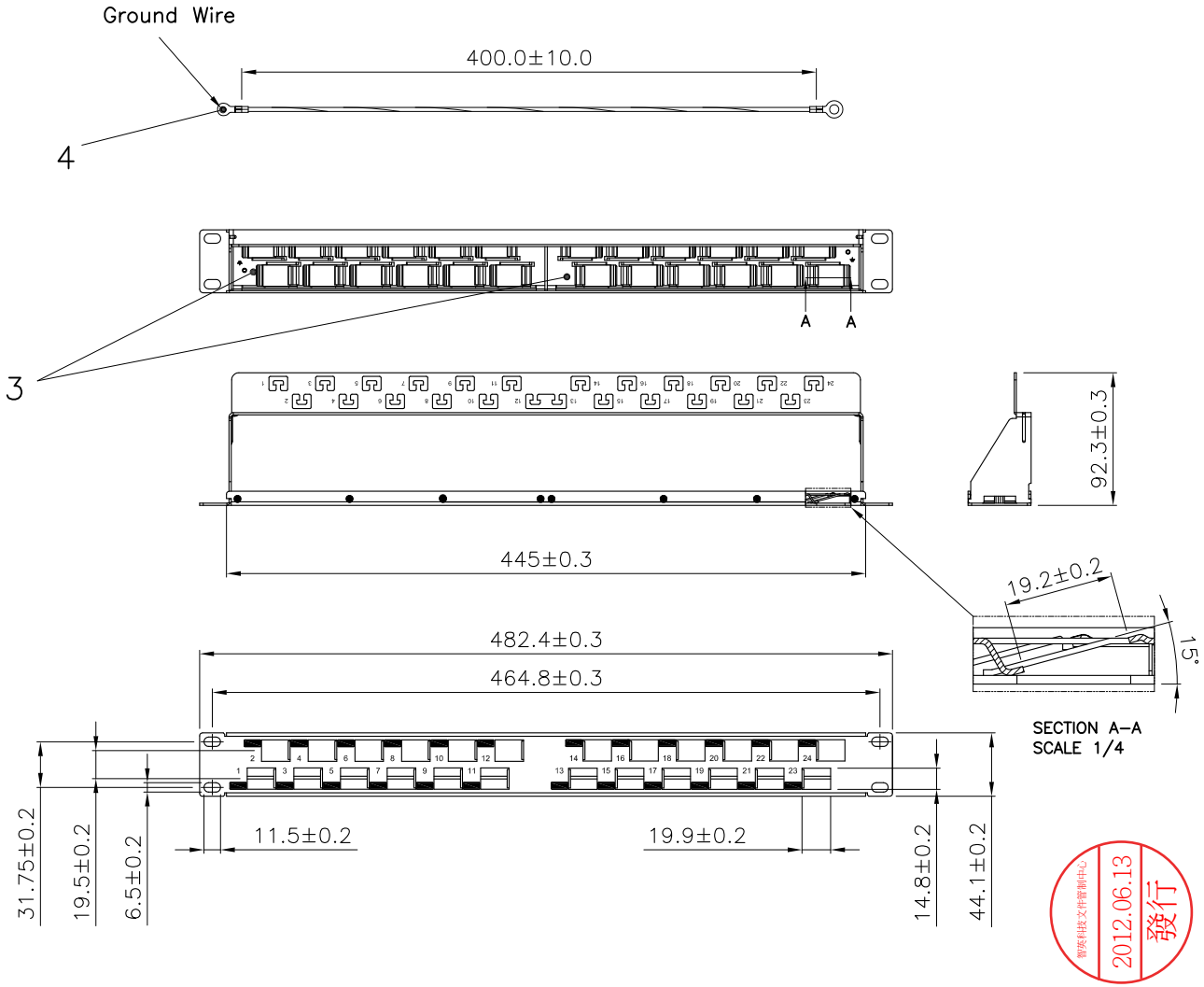

Specification :

Material :
1.Support Bar : SPCC, 1.5mm thickness with Black(RAL 9005) color painted.
2.Front Panel : SPCC, 1.5mm thickness with Black(RAL 9005) color painted.
3.Rear Panel : SPCC, 1.0mm thickness with 5~8u galvanize.
4.Ground Wire : 18 AWG Wire, with Green/Yellow striped color, length 40 cm.

GENERAL TOLERANCE OF DIMENSIONS				
X.XXX ±0.005	DRAWING	23.MAY.2012	JACK	
X.XX ±0.05	CHECK	23.MAY.2012	JANE	
X.X ±0.1	APPROVAL	23.MAY.2012	JAIMY	
		DATE	NAME	ITEM NO.: 72-3762
	SCALE 1/5(A4)	UNIT mm		DES.: ANGLE PANEL 1U 24P FS
	DRAWING NO.	ANGLE PANEL 1U 24P FS (SA2)		
	DRAWING CLASSIFICATION	S	SHEET 1	1

A2

2012.06.13 發行