RevNo	Revision note	Date	Signature	Checked

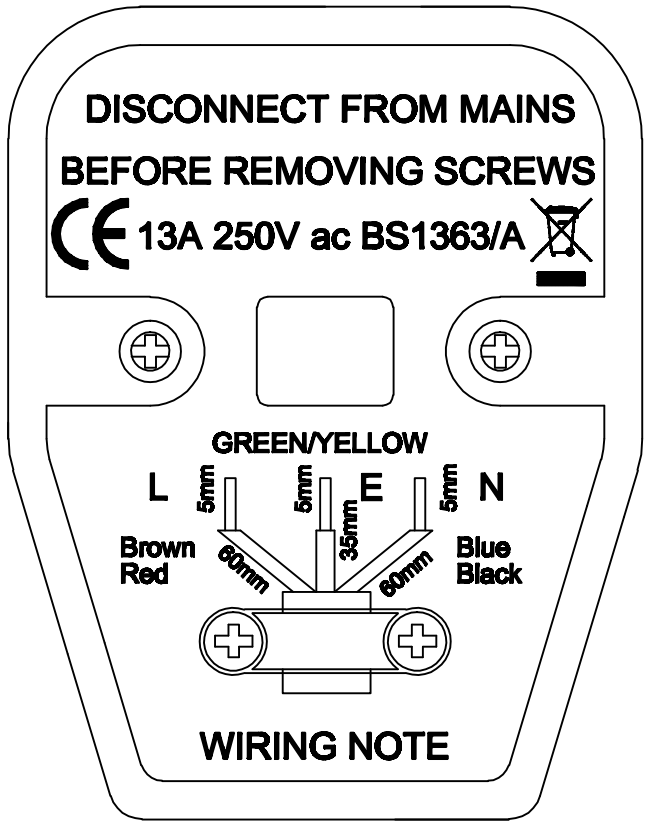

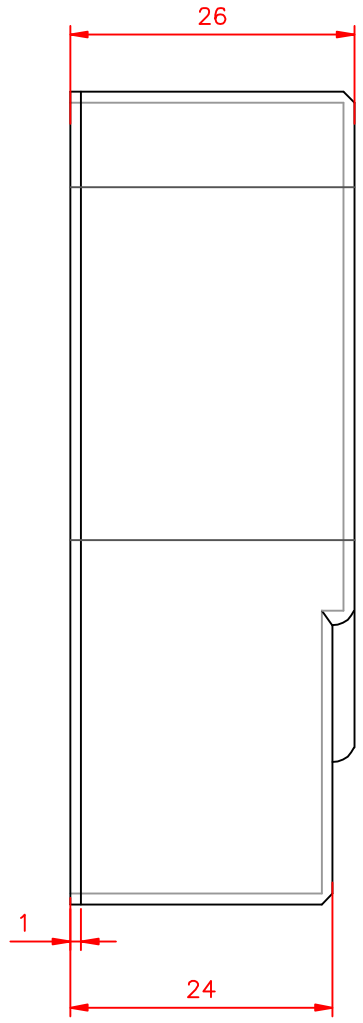

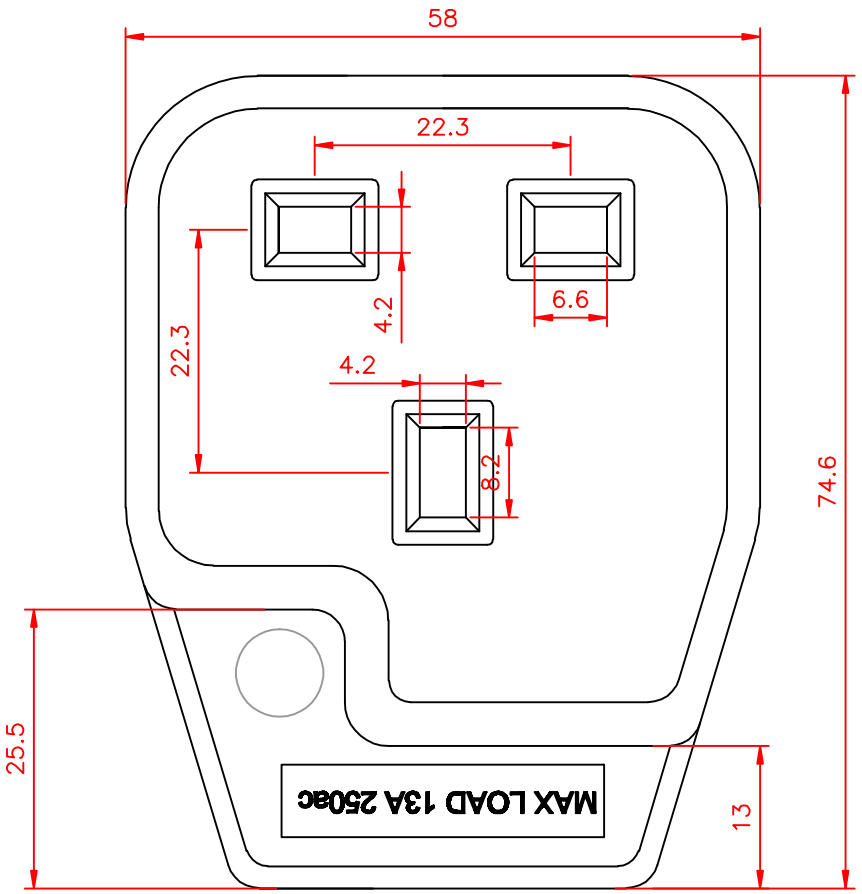

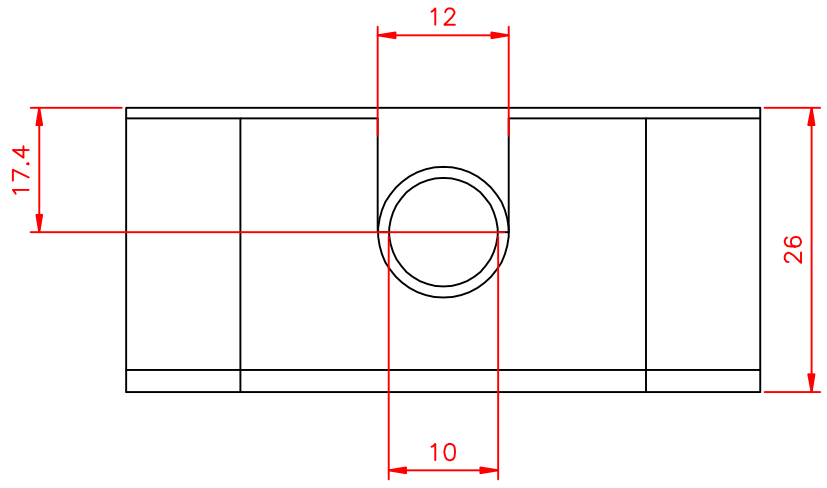

NOTES:

Cable electrical characteristics

1.Products 100% for electrical test.

2.Insulation resistance:No less than 15MΩ of 500V DC/0.4s

3.Dielectric strength:①Between two conductors 2500V AC for 1.0s Trip current 1.0mA max;②Between conductor and body 2500V AC for 1.0s Trip current 1.0mA max

4.The socket-outlet shall comply with BS1363-1:1995 and BS1363-2:1995

NO.	MATERIAL	DESCRIPTION	QTY.	UNIT
①	SOCKET	UK 1Gang SOCKET ASSEMBIY,BLACK	1	PCS

Itemref	Quantity	Title/Name,designation,material,dimension etc			Article No./Reference	
Designed by ACHY		Checked by HELEN	Approved by - date Feb 07.2018	File name UK Socket-outlet	Date Feb 07.2018	Scale FREE
ANGLE:		42-0490		UK Socket-outlet with screws		
UNIT:MM					Edition 1	Sheet 1/1